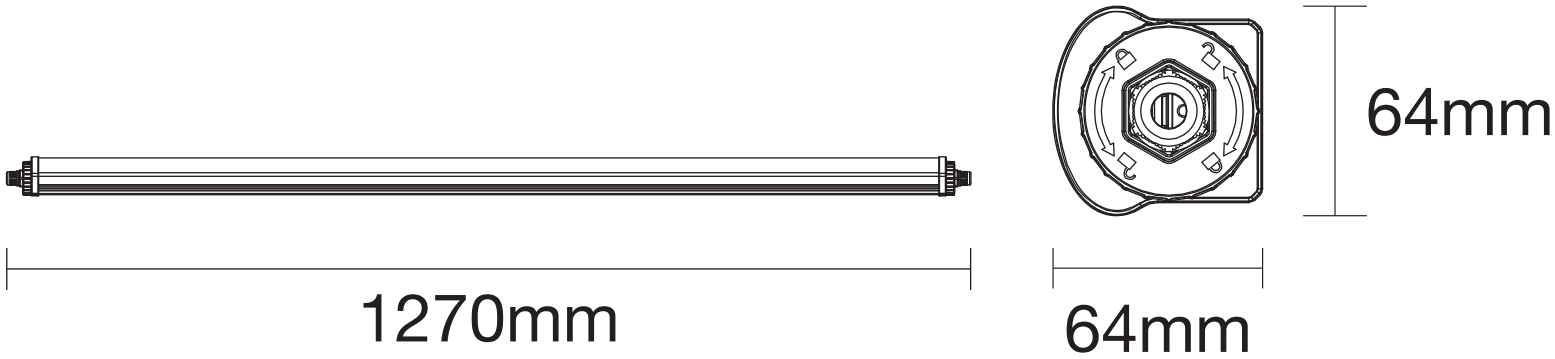
1270mm
64mm
64mm