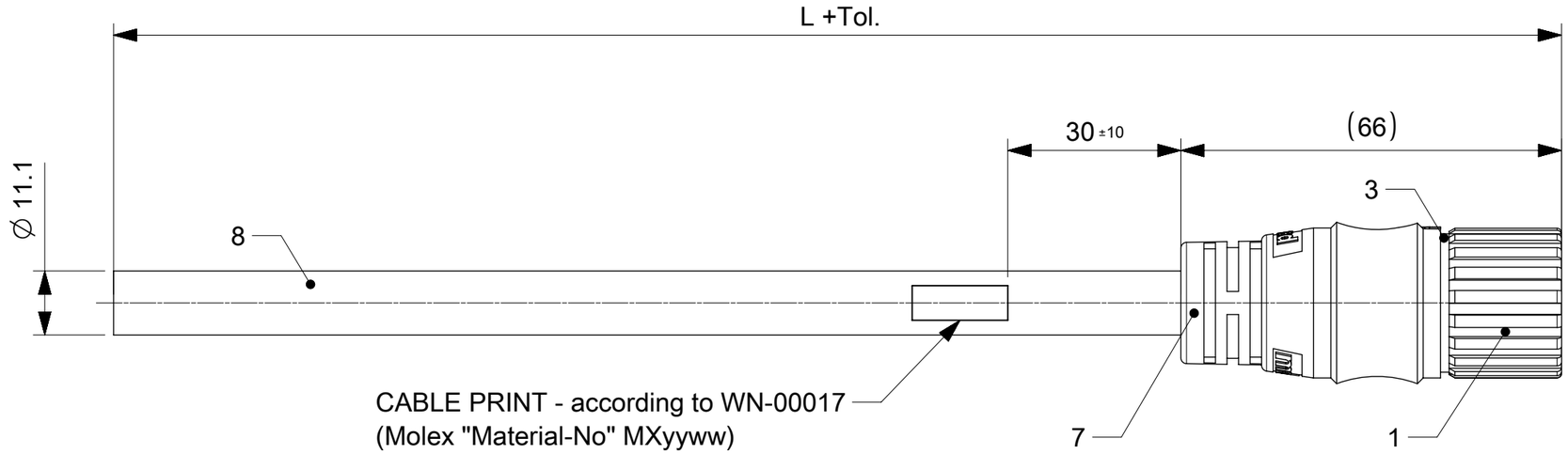

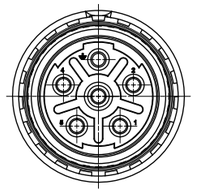

Technical Data:

Number of positions	5 + PE
Number of contacts	6
Contact Ø [mm]	2
Nominal current [A]	18
Nominal voltage [V~]	600
Degree of pollution 3	
Test voltage [V~]	3000
Max. contact resistance [mΩ]	3
Insulation resistance [MΩ]	> 10^{13}
Protection	IP 67 (connected)
Temperature range (fixed)	-40°C to 90°C
Temperature range (flex)	-25°C to 80°C

Packaging:
The cordsets delivered packed into carton without PE-bag.

TABLE 1

MOLEX P/N	ENGINEERING No.	L [mm]	Tol.[mm]
1204800800	K0P6S00W01M005	500	+40
1204800524	K0P6S00W01M010	1000	+40
1204800525	K0P6S00W01M020	2000	+60
1204800526	K0P6S00W01M030	3000	+60
1204800527	K0P6S00W01M040	4000	+60
1204800528	K0P6S00W01M050	5000	+60
1204800529	K0P6S00W01M100	10000	+80
1204800530	K0P6S00W01M150	15000	+140
1204800531	K0P6S00W01M200	20000	+140

Connector pin assignment
Plug M23 5+PE FE

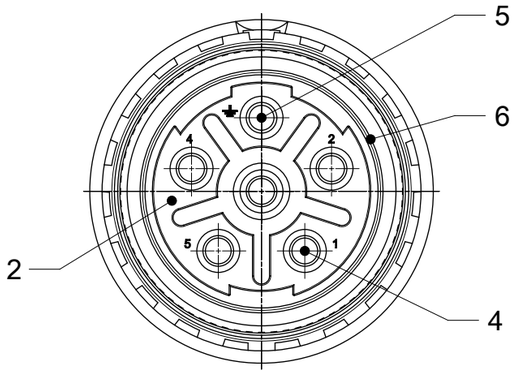

SCALE 2:1

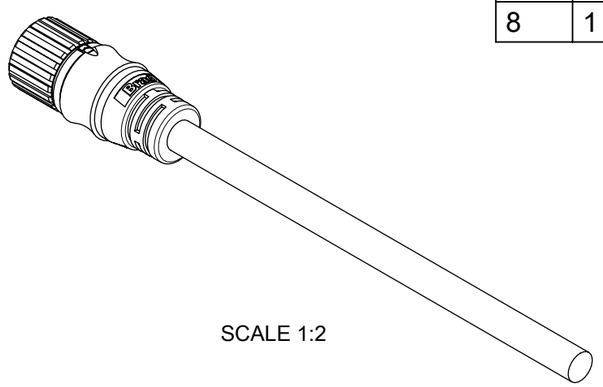

SCALE 1:2

Wiring Diagram
Connection: IN-LINE

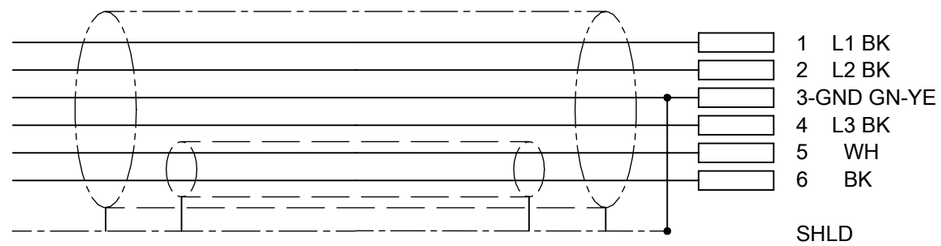

TABLE 2

POS	QTY	DESCRIPTION	MATERIAL	FINISH
1	1	NUT M23 FE	BRASS	NICKEL PLATED
2	1	INSERT M23 FE	PA	BLACK
3	1	SHELL M23 FE	BRASS	NICKEL PLATED
4	5	CONTACT 20 FE	COPPER ALLOY	GOLD OVER NICKEL
5	1	GROUNDING 20 FE	COOPER ALLOY	GOLD OVER NICKEL
6	1	GASKET OR	NBR	BLACK
7	1	OVERMOLD	TPU	BLACK
8	1	CABLE	WSOR	ORANGE

THIS DRAWING CONTAINS INFORMATION THAT IS PROPRIETARY TO MOLEX ELECTRONIC TECHNOLOGIES, LLC AND SHOULD NOT BE USED WITHOUT WRITTEN PERMISSION

FUNCTIONAL SYMBOLS: FA = 0, FC = 0, FP = 0
DIVISIONAL SYMBOLS

DIMENSION UNITS: mm
SCALE: 1:1
GENERAL TOLERANCES (UNLESS SPECIFIED)

ANGULAR TOL	±	1.0 °
4 PLACES	±	
3 PLACES	±	0.0
2 PLACES	±	0.05
1 PLACE	±	0.3
0 PLACES	±	0.5

DRAFT WHERE APPLICABLE MUST REMAIN WITHIN DIMENSIONS

CURRENT REV DESC:
EC NO: 720467
DRWN: APAWLAK01 2022/09/07
CHK'D: RSILLER 2022/09/08
APPR: RSILLER 2022/09/08
INITIAL REVISION:
DRWN: FGAIK 2015/12/01
APPR: RSILLER 2016/01/28

THIRD ANGLE PROJECTION | DRAWING: A3-SIZE | SERIES: 120480

molex

CSE M23 6P PC FE STR WSOR XM SHLD

PRODUCT CUSTOMER DRAWING

DOCUMENT NUMBER	DOC TYPE	DOC PART	REVISION
1204800800	PSD	000	B

MATERIAL NUMBER	CUSTOMER	SHEET NUMBER
see table 1	GENERAL MARKET	1 OF 1

DOCUMENT STATUS	P1	RELEASE DATE	2022/09/08 06:10:20

FORMAT: master-tb-prod-A3
REVISION: J1
DATE: 2021/05/01