LIDY SENSOR IR - BU10905 / BU10930

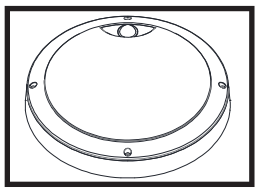

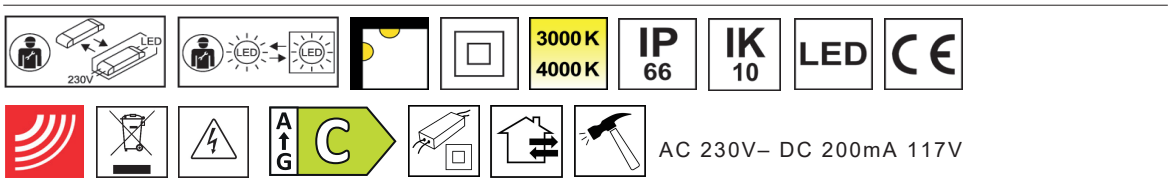

AC 230V– DC 200mA 117V

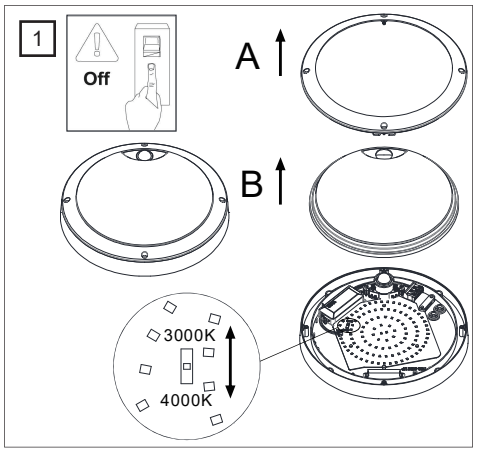

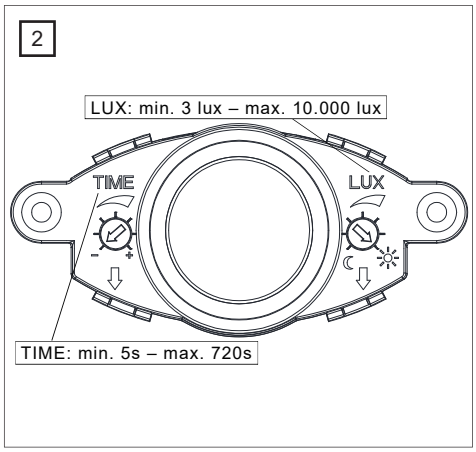

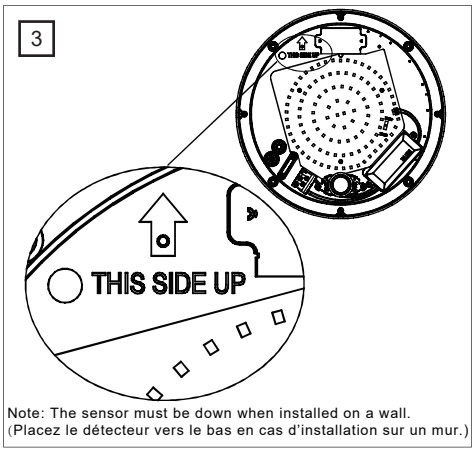

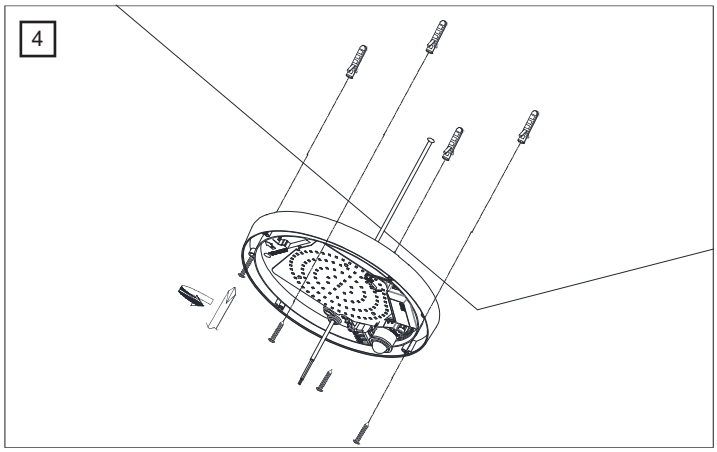

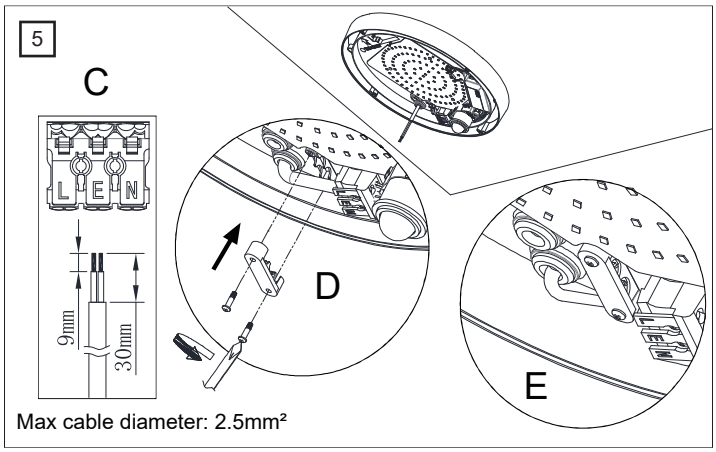

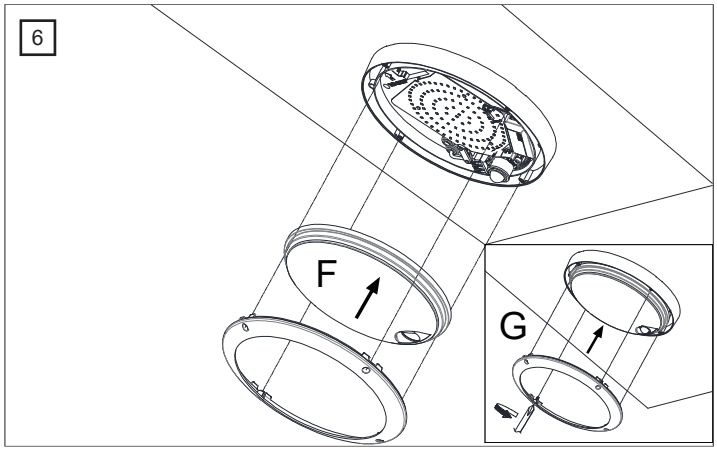

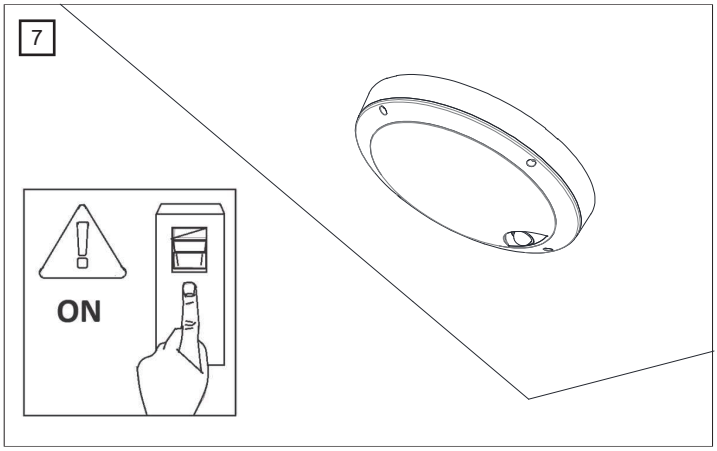

5yr

Warranty | Garantie | Garanzia | ضمان | Warranty | Warranty | Warranty | Warranty | Warranty | Warranty | Warranty | Warranty | Warranty | Warranty | Warranty | Warranty | Warranty | Warranty | Warranty | Warranty | Warranty | Warranty | Warranty | Warranty | Warranty | Warranty | Warranty | Warranty | Warranty

RUE DE LA LÉGENDE 32G, 4141 SPRIMONT, BELGIUM
VIALE ALEXANDRE GUSTAVE EIFFEL, ITALY
NN6 0BT, UK

V1