RONDY 2 W - WA280WW05 / WA280WW30 / WA280WW58 / WA280WW61

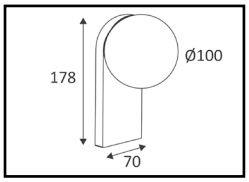

CRI >90 | DIM | IP 44 | LED | CE

230 V | A↑G D

AC 230V - DC 150mA 40V

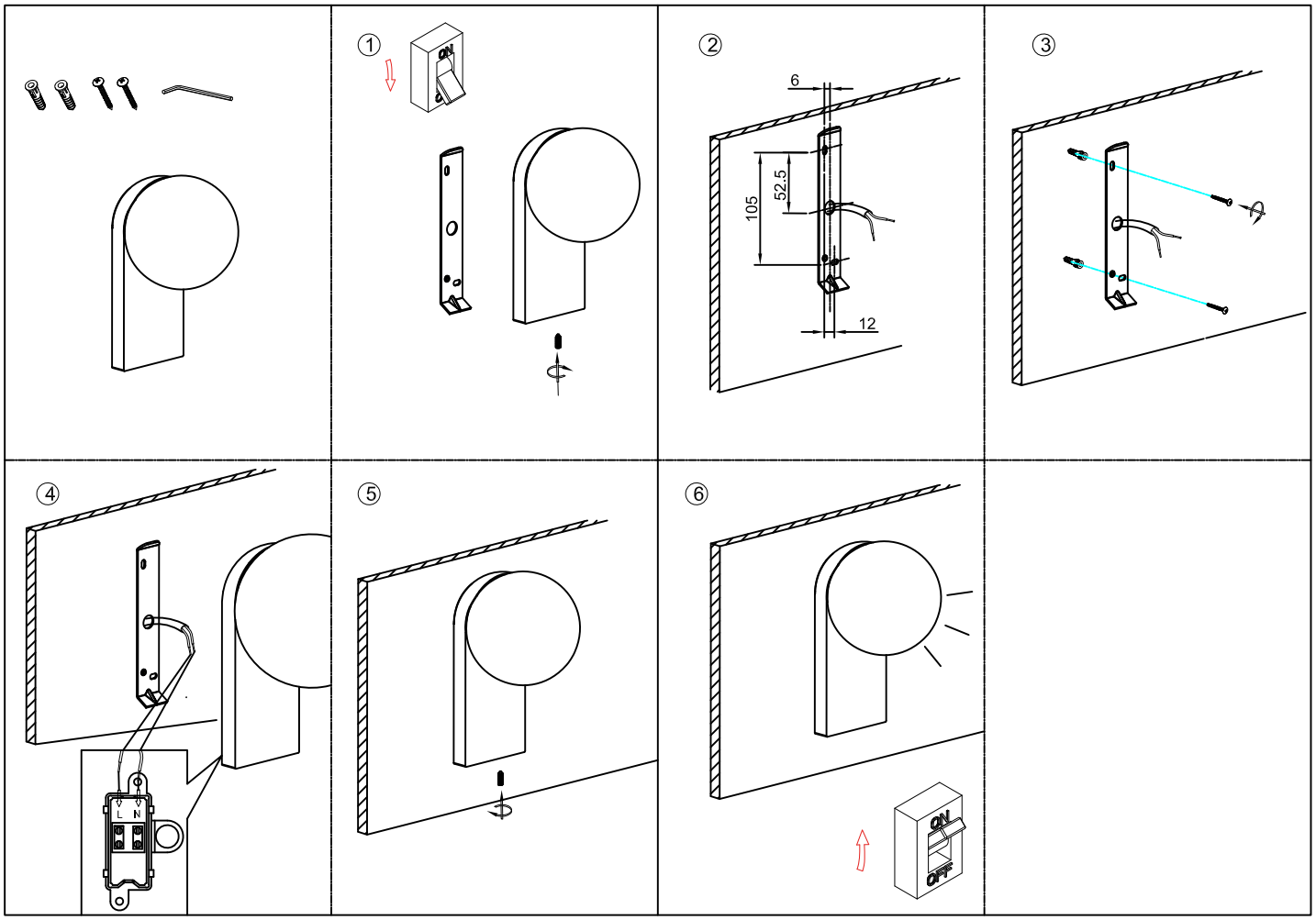

5yr

Warranty | Garantie | Garanzia | ضمان | Warranty | Warranty | Warranty | Warranty | Warranty | Warranty | Warranty | Warranty | Warranty | Warranty | Warranty | Warranty | Warranty | Warranty | Warranty | Warranty | Warranty | Warranty | Warranty | Warranty | Warranty | Warranty | Warranty | Warranty | Warranty

RUE DE LA LÉGENDE 32G, 4141 SPRIMONT, BELGIUM
VIALE ALEXANDRE GUSTAVE EIFFEL, ITALY
NN6 0BT, UK