OBIA 1 C, OBIA 2 C

INOVARA GROUP

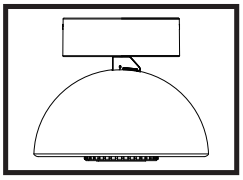

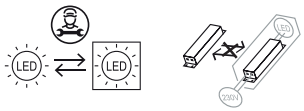

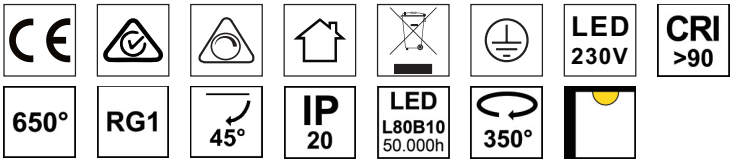

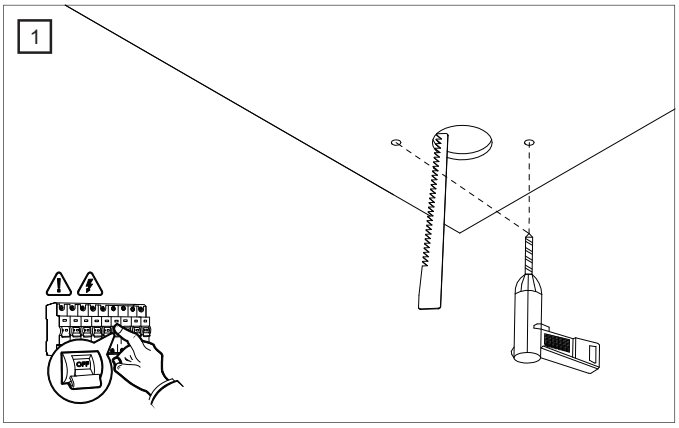

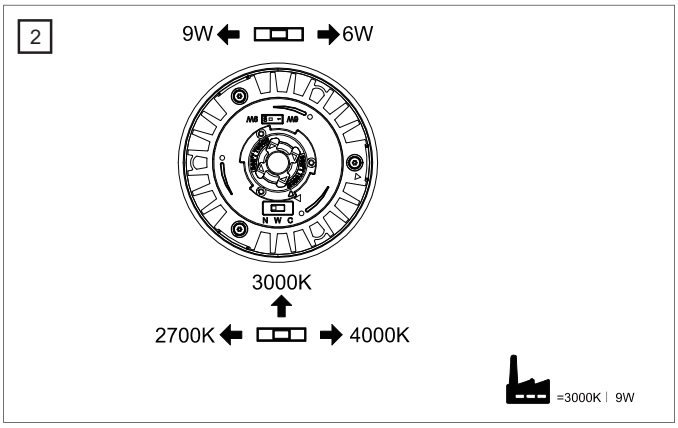

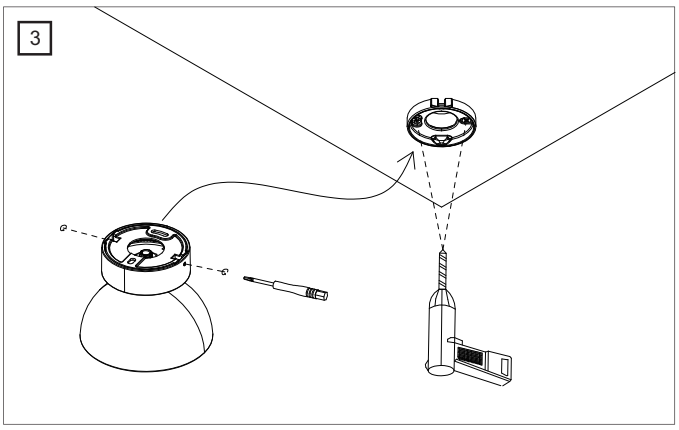

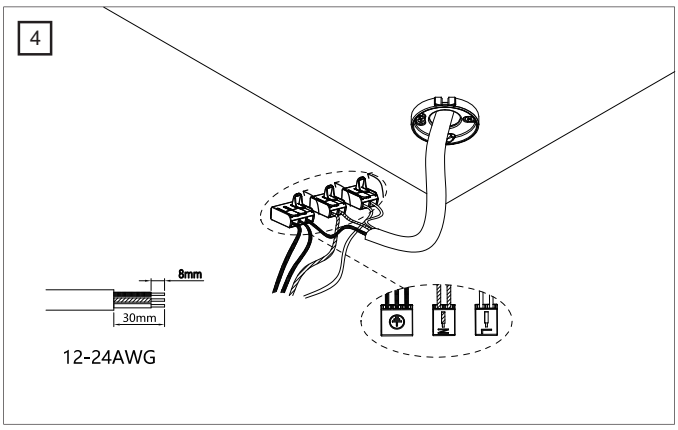

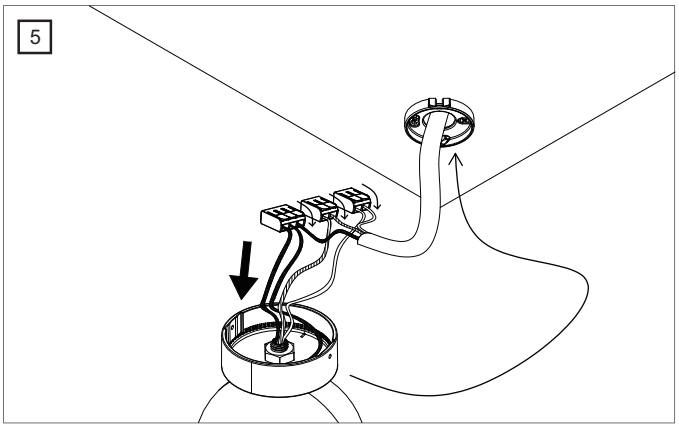

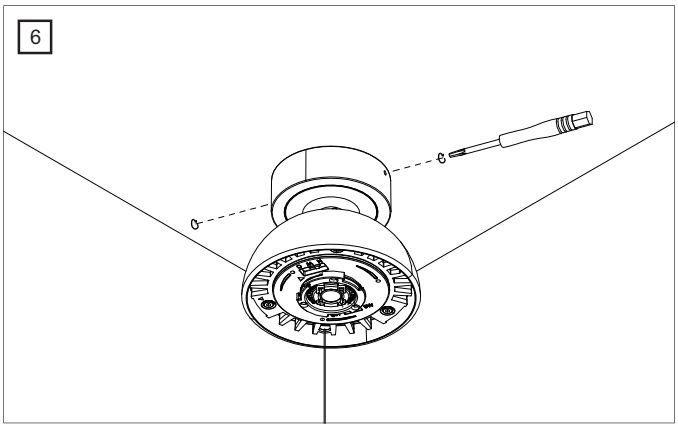

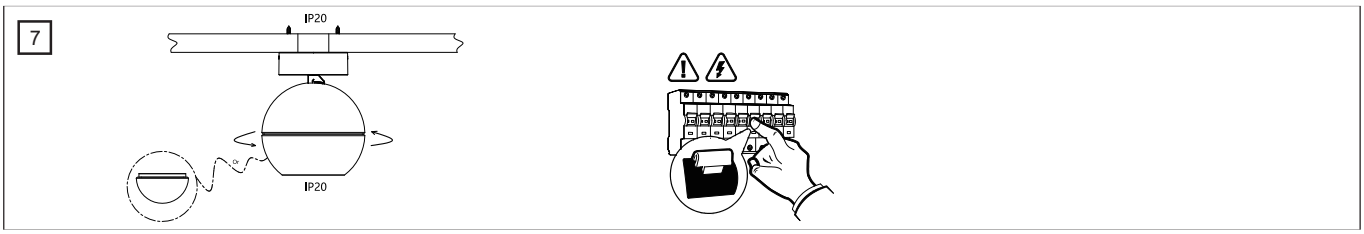

5yr

Warranty | Garantie | Garanzia | ضمان | Warranty | Warranty | Warranty | Warranty | Warranty | Warranty | Warranty | Warranty | Warranty | Warranty | Warranty | Warranty | Warranty | Warranty | Warranty | Warranty | Warranty | Warranty | Warranty | Warranty | Warranty | Warranty | Warranty | Warranty

RUE DE LA LÉGENDE 32G, 4141 SPRIMONT, BELGIUM
VIALE ALEXANDRE GUSTAVE EIFFEL, ITALY
NN6 0BT, UK