OBIA 1 P, OBIA 2 P

INOVARA GROUP

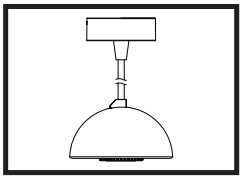

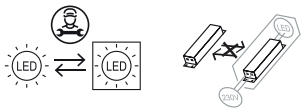

650° | RG1 | 45° | IP 20 | LED L80B10 50.000h | LED 230V | CRI >90

1

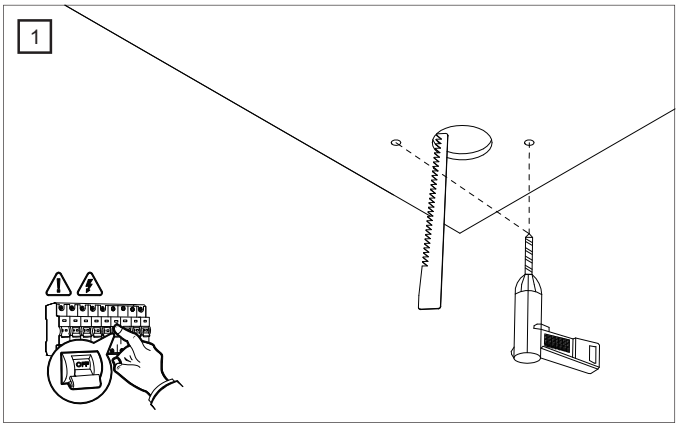

2

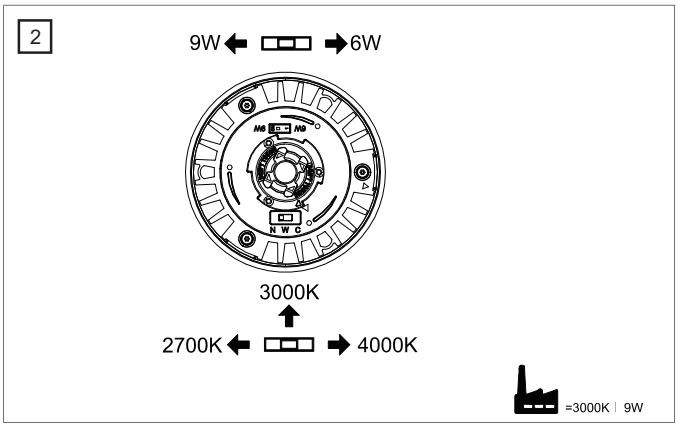

3

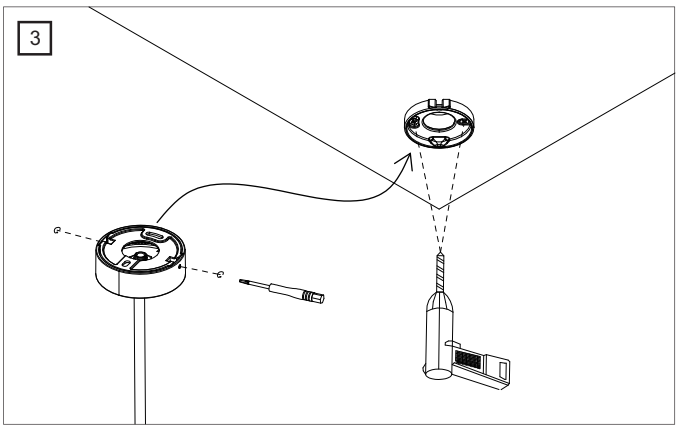

4

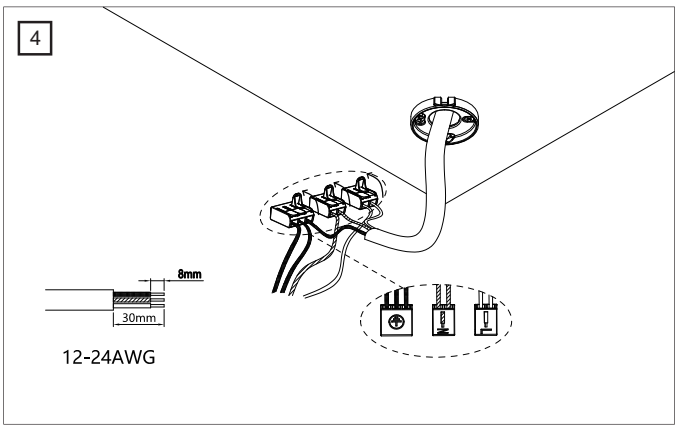

5

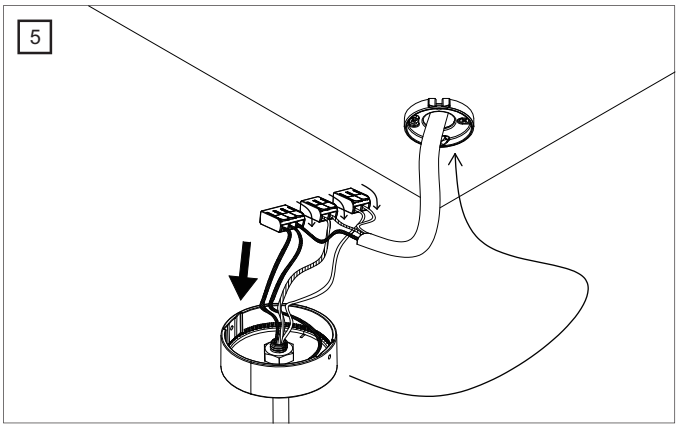

6

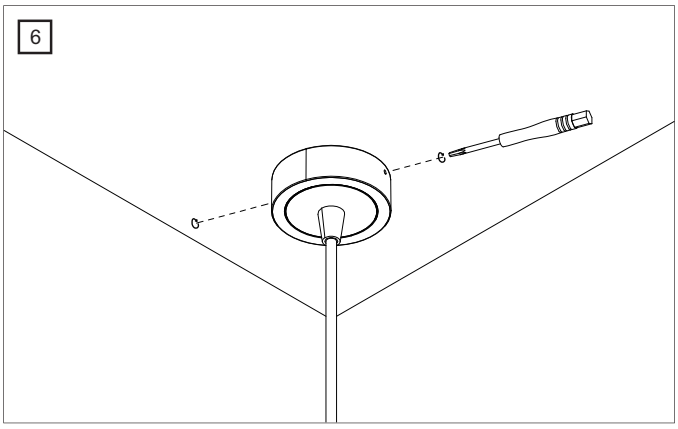

7

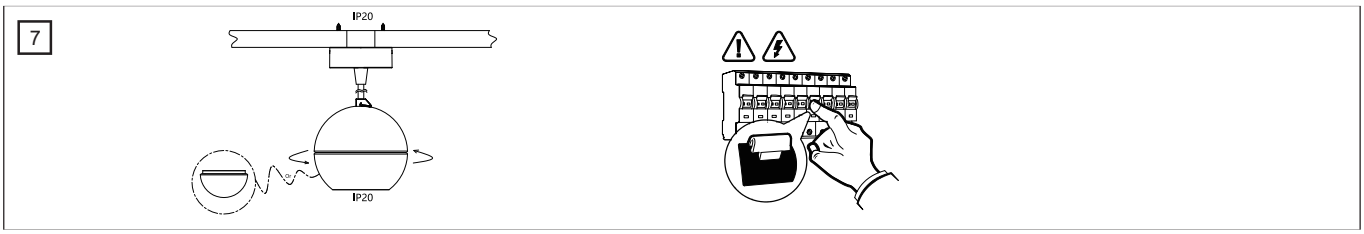

5yr

Warranty | Garantie | Garanzia | ضمان | Warranty | Warranty | Warranty | Warranty | Warranty | Warranty | Warranty | Warranty | Warranty | Warranty | Warranty | Warranty | Warranty | Warranty | Warranty | Warranty | Warranty | Warranty | Warranty | Warranty | Warranty | Warranty | Warranty | Warranty

RUE DE LA LÉGENDE 32G, 4141 SPRIMONT, BELGIUM
VIALE ALEXANDRE GUSTAVE EIFFEL, ITALY
NN6 0BT, UK