7GN2067O48

ROTARY CAM SWITCH 7GN SERIES, VOLTMETER SWITCH FOR PHASE-PHASE VOLTAGES 20A, MODULAR SERVICE COVER FOR 35MM DIN REAIL MOUNTING WITH BLACK HANDLE, FRONT PLATE 45X54MM

General characteristics

Switching diagram			67 - Voltmeter switch for phase-phase voltages
N° of elements			2
Mounting form			O48 - Modular service cover for 35mm din rail mounting with black handle

Contact characteristics

Rated insulation voltage Ui			
	IEC/EN	V	690
	UL/CSA	V	600
Rated impulse withstand voltage Uimp		kV	6
Conventional free air thermal current Ith			
	IEC/EN	A	20
	UL/CSA	A	20
Rated operational voltage		V	480
Rated operational impulse voltage		kV	4
Maximum fuse size for short-circuit protection In (gG)			
	10kA	A	20
	15kA	A	16
	25kA	A	16
Rated short time current Icw			
	1s	kA	250
Conductivity			10/5 mA/V
Operational current Ie IEC/EN			
AC1/AC21A			
		A	20
AC15			
	110V	A	10
	220/230V	A	8
	380/400V	A	6
	660/690V	A	1.5
Rated operational power in AC			
Three-phase AC-3			
	220/230V	kW	3
	380/440V	kW	5.5
	500/690V	kW	5.5
Single-phase AC-3			
	110V	kW	0.8
	220/230V	kW	2.2
	380/440V	kW	3
Three-phase AC23A			
	220/230V	kW	5
	380/440V	kW	7.5
	500/690V	kW	7.5
Single-phase AC23A			
	110V	kW	0.8
	220/230V	kW	2.5
	380/440V	kW	3.7
Rated operational current in DC			
DC21A			

The characteristics described in this document are subject to updates or modifications at any time. The descriptions, technical and functional information, illustrations and instructions in this brochure are purely illustrative, and are consequently not contractually binding

		48V	A	20
		60V	A	20
		110V	A	4
		220V	A	0.6
		440V	A	0.25
	DC23A (poles in series)			
		24V	A	20 (1)
		48V	A	20 (2)
		60V	A	20 (3)
		110V	A	10 (3)
		220V	A	8 (4)
	DC13			
		24V	A	20
		48V	A	16
		60V	A	12
		110V	A	1
		220V	A	0.4
		440V	A	0.15
Power dissipation			W	0.8
Mechanical features				
Terminals screw				M3
Tightening torque for terminals max			Nm	0.5
Conductor size				
	AWG - Rigid cable			
		min	AWG	20
		Max	AWG	12
	AWG - Flexible cable			
		min	AWG	20
		Max	AWG	14
	Conductor size (IEC) - Flexible cable			
		min	mm²	0.5
		Max	mm²	2.5
	Conductor size (IEC) - Rigid cable			
		min	mm²	0.5
		Max	mm²	2.5
Mechanical life			cycles	$5x10^6$
UL technical data				
Motor power for direct-on-line control				
	for three-phase motor			
		120V	HP	1.5
		240V	HP	3
		480V	HP	7.5
		600V	HP	10
	for single-phase motor			
		120V	HP	0.75
		240V	HP	2
Ambient conditions				
Temperature				
	Operating temperature			
		min	°C	-25
		max	°C	+55
	Storage temperature			
		min	°C	-40
		max	°C	+70

The characteristics described in this document are subject to updates or modifications at any time. The descriptions, technical and functional information, illustrations and instructions in this brochure are purely illustrative, and are consequently not contractually binding

Resistance & Protection

Frontal IP degree	IP40
Terminals IP degree	IP00

Dimensions

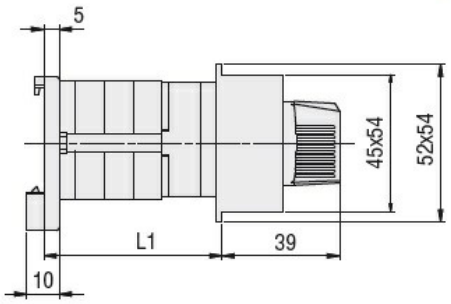

Series	L1		
	1	2	3
7GN12	38.1	47.8	57.5
7GN20	38.1	47.8	57.5
7GN25	42.5	56.1	69.7

Wiring diagrams

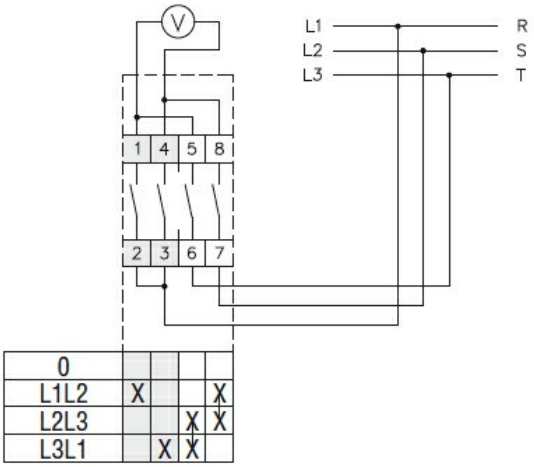

Certifications and compliance

Compliance	
	CSA C22.2 n° 14
	IEC/EN/BS 60947-1
	IEC/EN/BS 60947-3
	IEC/EN/BS 60947-5-1
	UL60947-4-1
Certificates	
	cCSAus
	EAC
	UL

ETIM classification

ETIM 8.0	EC001029 - Selector switch, complete

The characteristics described in this document are subject to updates or modifications at any time. The descriptions, technical and functional information, illustrations and instructions in this brochure are purely illustrative, and are consequently not contractually binding