GLX61B

DOOR-COUPLING HANDLE FOR GL0160...GL0315. SCREW FIXING. 125MM LEVER LENGTH PISTOL HANDLE - DEFEATABLE (REQ. UL508A). BLACK. □10MM. IP66, IP69K AND NEMA 4X

Product designation	Handle
Product type designation	GLX6

Dimensions

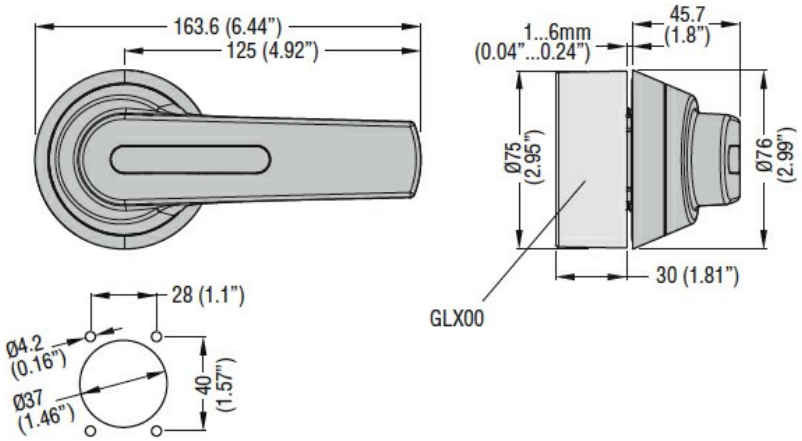

Certifications and compliance

Compliance	
	IEC/EN 60947-1
	IEC/EN 60947-3
Certifications	
	cULus

ETIM classification

ETIM 8.0	EC000230 - Door coupling handle for switchgear

The characteristics described in this document are subject to updates or modifications at any time. The descriptions, technical and functional information, illustrations and instructions in this brochure are purely illustrative, and are consequently not contractually binding